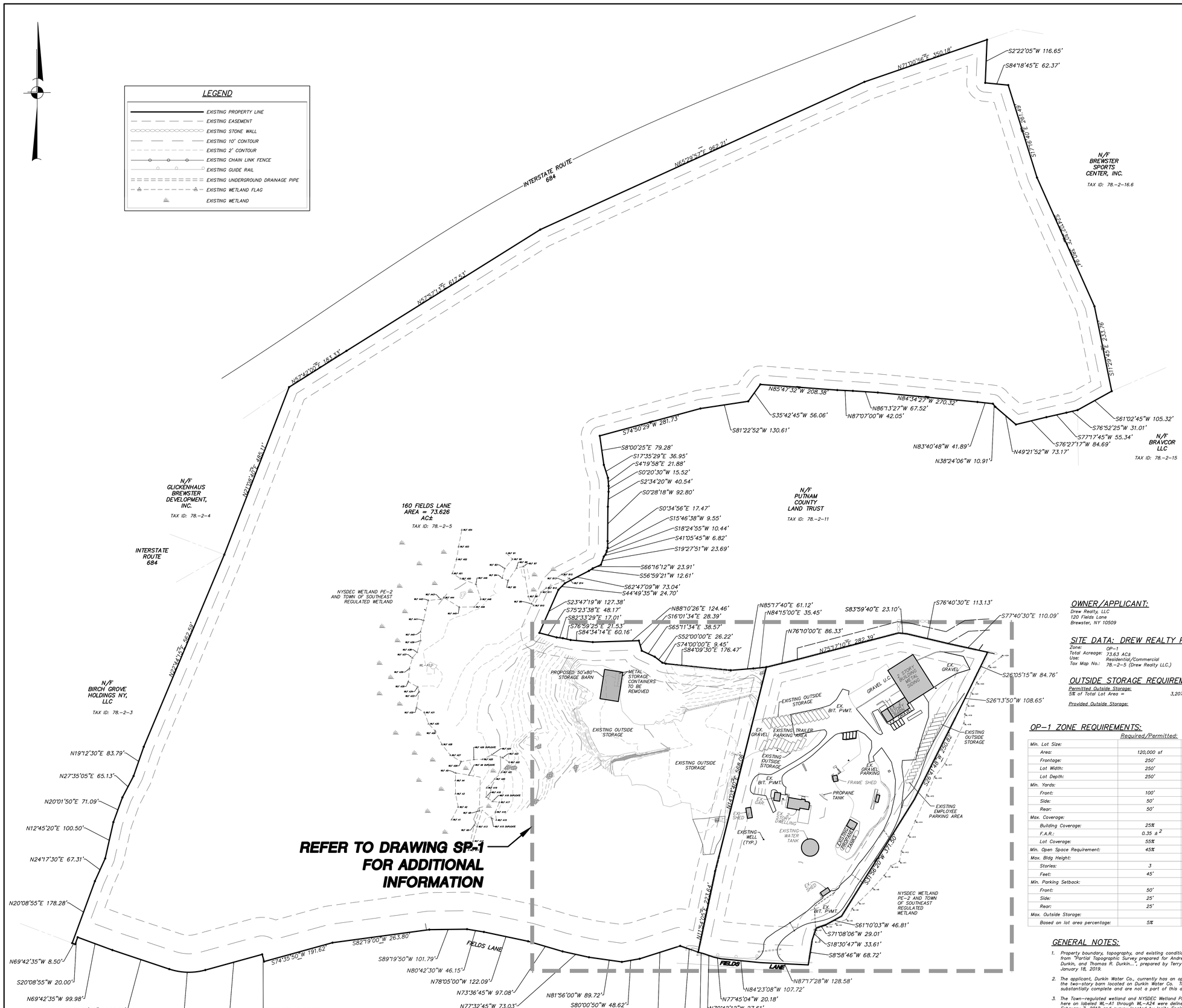

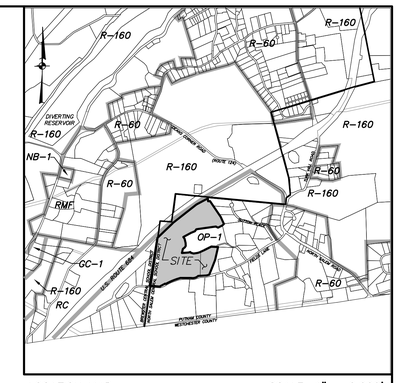

LOCATION MAP SCALE: 1" = 2,000'±

OWNER:
Andrew, Thomas & Raymond Durkin
P.O. Box 372
Brewster, NY 10509

APPLICANT:
Durkin Water Co.
P.O. Box 372
Brewster, NY 10509

SITE DATA: DURKIN PARCEL
Zone: OP-1
Total Acreage: 9.09 AC±
Use: Residential/Commercial
Tax Map No.: 78.-2-6 (Durkin Water Co.)

OP-1 ZONE REQUIREMENTS:

	Required/Permitted:	Durkin Water Co. Provided:
Min. Lot Size:		
Area:	120,000 sf	395,960 sf ±
Frontage:	250'	300' ±
Lot Width:	250'	440' ±
Lot Depth:	250'	910' ±
Min. Yards:		
Front:	100'	189'±
Side:	50'	Greater than 50'
Rear:	50'	52'
Max. Coverage:		
Building Coverage:	25%	4.5% ±
F.A.R.:	0.35 ±[2]	0.05 ±
Lot Coverage:	55%	38.2% ±
Min. Open Space Requirement:	45%	61.8% ±
Max. Bldg Height:		
Stories:	3	2 1/2 Stories
Feet:	45'	38' ±
Min. Parking Setback:		
Front:	50'	400' ±
Side:	25'	15' ±[1]
Rear:	25'	Greater than 25'
Max. Outside Storage:		
Based on lot area percentage:	5%	5.0% ±

Notes:
1. Pre-existing non-conforming.
2. In accordance with "Note P" of the Commercial Zoning Schedule, where storage and warehouse space comprises more than 2/3 (67% ±) of the total floor area, a floor area ratio (F.A.R.) not to exceed 0.35 shall be permitted.

PARKING REQUIREMENTS:
Required:

Durkin Homestead:	2 spaces/dwelling =	2 spaces
Durkin Water Co.:	7 employees @ 1 space/1.5 empl. =	5 spaces
Electrical Tenant	3 employees @ 1 space/1.5 empl. =	2 spaces
Tenants:	6 employees @ 1 space/1.5 empl. =	4 spaces
	Total spaces required =	13 spaces

Provided:

Durkin Homestead =	4 spaces
Durkin Water Co. =	12 spaces
Electrical Tenant =	4 spaces
Tenants =	4 spaces
Total spaces provided =	24 spaces

LOADING REQUIREMENTS:
Loading spaces are not required for residential use or outdoor storage, or with wholesale business, contractor's business, or office building with a ground floor area of less than 4,000 s.f., in accordance with Subsection 136-69.

3 loading spaces are provided.

BUILDING COVERAGE REQUIREMENTS:
Existing Structures (Building Coverage):

Existing Residence =	1,510 s.f.
Existing Garage =	360 s.f.
Existing Barn =	10,804 s.f.
Existing Sheds =	878 s.f.
Existing Water Tank =	1,726 s.f.
Existing Loading Docks with Roof =	631 s.f.
Existing Propane Tanks =	1,955 s.f.
Total Building Coverage =	17,864 s.f.

Permitted Building Coverage: 395,960 s.f. x 25% = 98,990 s.f.

OUTSIDE STORAGE REQUIREMENTS:
Existing & Proposed Outside Storage:
Existing Outside Storage:
35 Trailer Spaces (Durkin Water Co.) x 300 s.f. = 10,500 s.f.
Total Existing Outside Storage = 11,148 s.f.

Proposed Outside Storage:
4 Truck Spaces (Tenant #2) x 162 s.f. = 640 s.f.
Gravel Area (Adjacent to Two Story Barn) = 7,808 s.f.
Total Proposed Outside Storage = 8,448 s.f.
Total Outside Storage = 19,596 s.f.

Permitted Outside Storage:
5% of Total Lot Area = 395,960 s.f. x 5% = 19,798 s.f.

OWNER/APPLICANT:
Drew Realty LLC
120 Fields Lane
Brewster, NY 10509

SITE DATA: DREW REALTY PARCEL
Zone: OP-1
Total Acreage: 73.63 AC±
Use: Residential/Commercial
Tax Map No.: 78.-2-5 (Drew Realty LLC.)

OUTSIDE STORAGE REQUIREMENTS:
Permitted Outside Storage:
5% of Total Lot Area = 3,207,160 x 5% = 160,358 SF

Provided Outside Storage: 100,610 SF

OP-1 ZONE REQUIREMENTS:

	Required/Permitted:	Drew Realty LLC. Provided:
Min. Lot Size:		
Area:	120,000 sf	3,207,160 sf ±
Frontage:	250'	1,770' ±
Lot Width:	250'	1,680' ±
Lot Depth:	250'	1,620' ±
Min. Yards:		
Front:	100'	690' ±
Side:	50'	365' ±
Rear:	50'	75' ±
Max. Coverage:		
Building Coverage:	25%	0.1% ±
F.A.R.:	0.35 ±[2]	0.001 ±
Lot Coverage:	55%	3.8% ±
Min. Open Space Requirement:	45%	96.2% ±
Max. Bldg Height:		
Stories:	3	Less than 3 stores
Feet:	45'	Less than 45'
Min. Parking Setback:		
Front:	50'	N/A
Side:	25'	N/A
Rear:	25'	Greater than 25'
Max. Outside Storage:		
Based on lot area percentage:	5%	3.2% ±

GENERAL NOTES:
1. Property boundary, topography, and existing conditions shown hereon taken from "Partial Topographic Survey prepared for Andrew J. Durkin, Raymond C. Durkin, and Thomas R. Durkin...", prepared by Terry Bergendorff Collins, dated January 18, 2019.
2. The applicant, Durkin Water Co., currently has an open Building Permit for the two-story barn located on Durkin Water Co. These improvements are substantially complete and are not a part of this application.
3. The Town-regulated wetland and NYSDEC Wetland PE-2 boundaries as shown here on labeled WL-A1 through WL-A24 were delineated by Doug Gaugler on February 7, 2012 and survey located by Insite Engineering, Surveying & Landscape Architecture, P.C., on March 9, 2012.
4. The Town-regulated wetland and NYSDEC Wetland PE-2 boundaries as shown here on labeled WLF A1 through WLF A54, and WLF B1 through WLF B15 were delineated by Jim Bates, Ecological Analysis, LLC on March 27, 2019 and survey located by Terry Bergendorff Collins on May 2, 2019.
5. Existing tree lines shown hereon are approximate.
6. The subject properties fall within the Brewster-Southeast Joint Fire District.
7. The subject properties fall within the North Salem School District.

NO.	DATE	REVISION	BY
3	5-20-19	REVISED FOR PLANNING BOARD SUBMISSION	JFR
2	5-6-19	REVISED PER TOWN CONSULTANT COMMENTS	JFR
1	4-1-19	REVISED PER TOWN CONSULTANT COMMENTS	JFR

INSITE
ENGINEERING, SURVEYING & LANDSCAPE ARCHITECTURE, P.C.
3 Garrett Place
Carmel, NY 10512
(845) 225-9690
(845) 225-9717 fax
www.insite-eng.com

PROJECT:
DURKIN WATER CO. AND DREW REALTY, LLC
120 & 160 FIELDS LANE, TOWN OF SOUTHEAST, PUTNAM CO., NEW YORK

DRAWING:
AMENDED OVERALL PLAN

PROJECT NUMBER	99169.100	PROJECT MANAGER	J.J.C.	DRAWING NO.	SHEET
DATE	3-4-19	DRAWN BY	J.F.R.	OP-1	1 / 3
SCALE	1" = 100'	CHECKED BY	J.L.L.		

ALTERATION OF THIS DOCUMENT, UNLESS UNDER THE DIRECTION OF A LICENSED PROFESSIONAL ENGINEER, IS A VIOLATION OF SECTION 7209 OF ARTICLE 145 OF THE EDUCATION LAW.

Z:\EVERYBODY\OP-1.dwg, 5/20/2019 2:26:16 PM, jvanes, 1:1

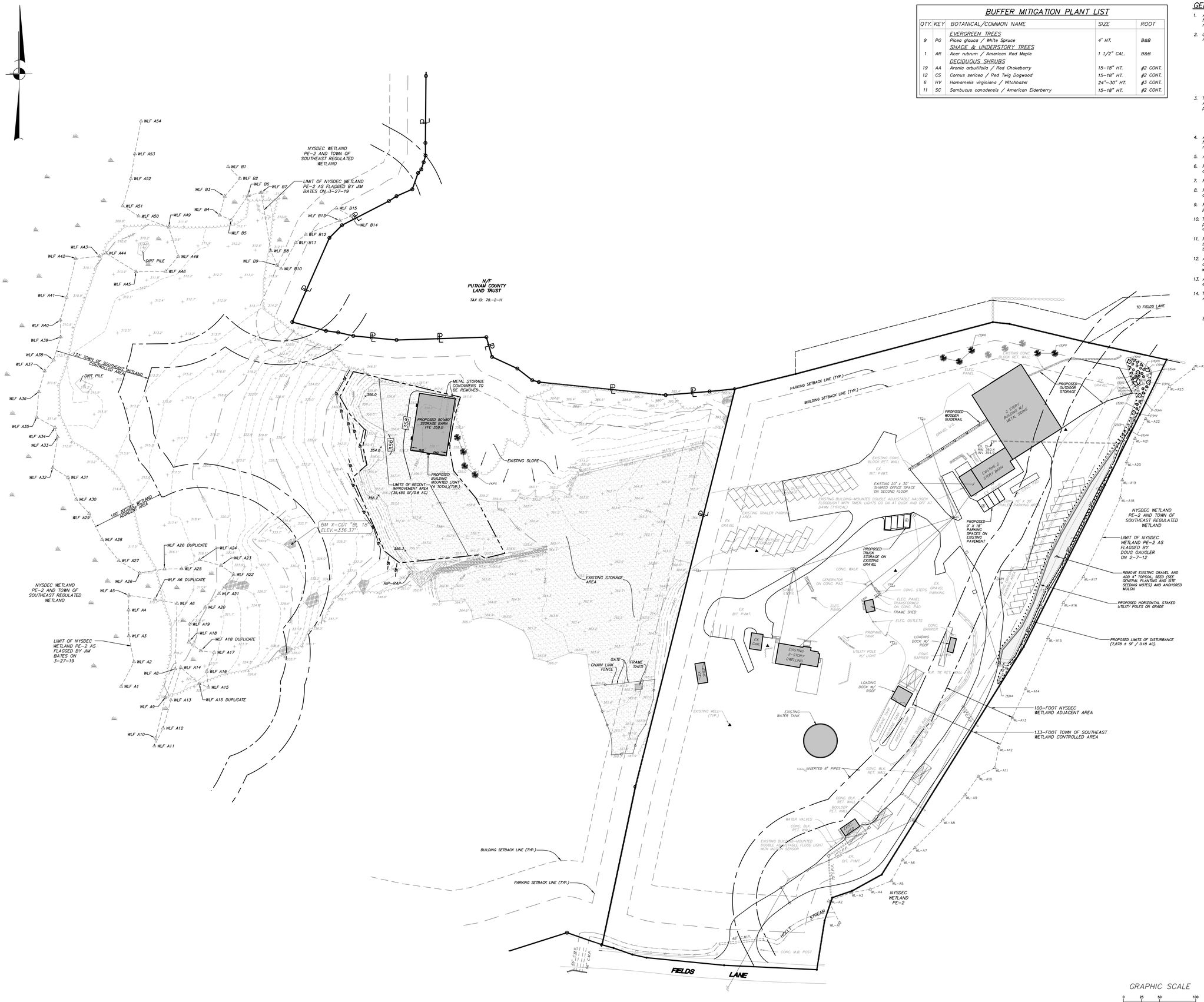

BUFFER MITIGATION PLANT LIST

QTY.	KEY	BOTANICAL/COMMON NAME	SIZE	ROOT
		EVERGREEN TREES		
9	PG	Picea glauca / White Spruce	4' HT.	B&B
		SHADE & UNDERSTORY TREES		
1	AR	Acer rubrum / American Red Maple	1 1/2" CAL.	B&B
		DECIDUOUS SHRUBS		
19	AA	Aronia arbutifolio / Red Chokeberry	15-18" HT.	#2 CONT.
12	CS	Cornus sericea / Red Twig Dogwood	15-18" HT.	#2 CONT.
6	HV	Hamamelis virginiana / Witchhazel	24"-30" HT.	#3 CONT.
11	SC	Sambucus canadensis / American Elderberry	15-18" HT.	#2 CONT.

GENERAL PLANTING AND SITE SEEDING NOTES:

1. All proposed seeded areas to receive 4" min. depth of topsoil. Soil amendments and fertilizer application rates shall be determined based on specific testing of topsoil material.
2. Upon final grading and placement of topsoil and any required soil amendments, areas to receive permanent vegetation cover in combination with suitable mulch as follows:
   - select seed mixture per drawings and seeding notes.
   - fertilizer applied at the manufacturer's recommended rate using phosphorous-free fertilizer or equivalent. Soil test shall be performed prior to using any fertilizer on site.
   - mulch: salt hay or small grain straw applied at a rate of 90 lbs./1000 s.f. or 2 tons/acre, to be applied and anchored according to New York State Standards and Specifications for Erosion and Sediment Control, August 2005.
   - If the season prevents the establishment of a permanent vegetation cover, the disturbed areas will be mulched with straw or equivalent.
3. The seed mix for lawn areas to be planted between April 1 and May 15, or between August 15 and October 15, or as directed by project representative at a rate of 50 lbs. per acre:

Kentucky Bluegrass	20%
Creeping Red Fescue	40%
Perennial Ryegrass	20%
Annual Ryegrass	20%

4. All proposed planting beds to receive a 12" min. depth of topsoil. Soil amendments and fertilizer application rates shall be determined based on specific testing of topsoil material.
5. All plant material to be nursery grown.
6. Rooted cuttings shall conform with ANSI Z60.1 American Standard for Nursery Stock in all ways including dimensions.
7. Rooted cuttings shall be taken from healthy nursery stock.
8. Rooted cuttings shall be grown under climate conditions similar to those in the locality of the project.
9. Rooted cuttings as noted in Note #14B shall be planted in all locations designed on the plan.
10. The location and layout of landscape plants shown on the site plan shall take precedence in any discrepancies between the quantities of plants shown on the plans and the quantity of plants in the Plant List.
11. Provide a 3" layer of shredded mulch (or as specified) over entire watering saucer at all tree pits or over entire planting bed. Do not place mulch within 3" of tree or shrub trunks.
12. All landscape plantings shall be maintained in a healthy condition at all times. Any dead or diseased plants shall immediately be replaced "in kind" by the contractor (during warranty period) or project owner.
13. All landscape and mitigation plantings shall be installed by hand. No mechanical equipment shall be permitted.
14. The plantings as specified on these drawings are as follows:
    A. Seed Mix for Existing Gravel Storage Area as shown on the drawings at a rate of 30 lbs. per acre:
       Native Right-of-Way Woods Mix (ERNMX-132-1) from Ernst Conservation Seeds of Meadville, PA.
    B. (33) Silky Dogwood (Cornus amomum) and (33) Red Osier Dogwood (Cornus sericea) Rooted Cuttings planted randomly, spaced 5' O.C., from Ernst Conservation Seeds of Meadville, PA.

LEGEND

- EXISTING PROPERTY LINE
- EXISTING EASEMENT
- EXISTING STONE WALL
- EXISTING 10' CONTOUR
- EXISTING 2' CONTOUR
- EXISTING SPOT GRADE
- EXISTING TREELINE
- EXISTING CHAIN LINK FENCE
- EXISTING GUIDE RAIL
- EXISTING OVERHEAD WIRES
- EXISTING UTILITY POLE w/ overhead wires
- EXISTING UNDERGROUND DRAINAGE PIPE
- EXISTING WETLAND FLAG
- EXISTING WETLAND
- EXISTING NYSDEC WETLAND BUFFER
- EXISTING TOWN CONTROLLED AREA BUFFER
- PROPOSED PARKING STALLS
- PROPOSED SILT FENCE
- PROPOSED LIMITS OF DISTURBANCE
- PROPOSED 2-FOOT CONTOUR
- PROPOSED SPOT GRADE
- PROPOSED LANDSCAPING

GRAPHIC SCALE

0 25 50 100

(IN FEET)
1 inch = 50 ft.

NO.	DATE	REVISION	BY
3	5-20-19	REVISED FOR PLANNING BOARD SUBMISSION	JFR
2	5-6-19	REVISED PER TOWN CONSULTANT COMMENTS	JFR
1	4-1-19	REVISED PER TOWN CONSULTANT COMMENTS	JFR

INSITE
ENGINEERING, SURVEYING & LANDSCAPE ARCHITECTURE, P.C.
3 Garrett Place
Carmel, NY 10512
(845) 225-9690
(845) 225-9717 fax
www.insite-eng.com

PROJECT:
DURKIN WATER CO. AND DREW REALTY, LLC
120 & 160 FIELDS LANE, TOWN OF SOUTHEAST, PUTNAM CO., NEW YORK

DRAWING:
SITE PLAN

PROJECT NUMBER	99169.100	PROJECT MANAGER	J.J.C.	DRAWING NO.	SHEET
DATE	3-4-19	DRAWN BY	J.F.R.	SP-1	2 / 3
SCALE	1" = 50'	CHECKED BY	J.L.L.		

ALTERATION OF THIS DOCUMENT, UNLESS UNDER THE DIRECTION OF A LICENSED PROFESSIONAL ENGINEER, IS A VIOLATION OF SECTION 7209 OF ARTICLE 145 OF THE EDUCATION LAW.

Z:\E:\99169\100\DWG\SP\Layg_5-20-2019 2:25:02 PM_jrydes.1:1

EROSION & SEDIMENT CONTROL NOTES:

1. The owner's field representative (O.F.R.) will be responsible for the implementation and maintenance of erosion and sediment control measures on this site prior to and during construction.
2. All construction activities involving the removal or disposition of soil are to be provided with appropriate protective measures to minimize erosion and contain sediment disposition within. Minimum soil erosion and sediment control measures shall be implemented as shown on the plans and shall be installed in accordance with "New York Standards and Specifications For Erosion and Sediment Control," latest edition.
3. Wherever feasible, natural vegetation should be retained and protected. Disturbance shall be minimized in the areas required to perform construction. No more than 5 acres of unprotected soil shall be exposed at any one time.
4. When land is exposed during development, the exposure shall be kept to the shortest practical period of time. In the areas where soil disturbance activity has temporarily or permanently ceased, the application of soil stabilization measures must be initiated by the end of the next business day and completed within seven (7) days from the date the current soil disturbance activity ceased. Disturbance shall be minimized to the areas required to perform construction.
5. Silt fence shall be installed as shown on the plans prior to beginning any clearing, grubbing or earthwork.
6. All topsoil to be stripped from the area being developed shall be stockpiled and immediately seeded for temporary stabilization. Ryegrass (annual or perennial) at a rate of 30 lbs. per acre shall be used for temporary seeding in spring, summer or early fall. 'Aristook' Winter Rye (cereal rye) shall be used for temporary seeding in late fall and winter.
7. Any disturbed areas not subject to further disturbance or construction traffic, permanent or temporary, shall have soil stabilization measures initiated for permanent vegetation cover in combination with a suitable mulch within 1 business day of final grading. All seeded areas to receive a minimum 4" topsoil (from stockpile area) and be seeded and mulched as follows:
   - Seed mixture to be planted between March 21 and May 20, or between August 15 and October 15 or as directed by project representative at a rate of 100 pounds per acre in the following proportions:
     - Kentucky Bluegrass 20%
     - Creeping Red Fescue 40%
     - Perennial Ryegrass 20%
     - Annual Ryegrass 20%
   - Mulch: Salt hay or small grain straw applied at a rate of 90 lbs./1000 S.F. or 2 tons/acre, to be applied and anchored according to "New York Standards and Specification For Erosion and Sediment Control," latest edition.
8. Grass seed mix may be applied by either mechanical or hydroseeding methods. Seeding shall be performed in accordance with the current edition of the "NYSDOT Standard Specification, Construction and Materials, Section 610–3.02, Method No. 1". Hydroseeding shall be performed using materials and methods as approved by the site engineer.
9. Cut or fill slopes steeper than 3:1 shall be stabilized immediately after grading with Curlex I Single Net Erosion Control Blanket, or approved equal.
10. Paved roadways shall be kept clean at all times.
11. The site shall at all times be graded and maintained such that all stormwater runoff is diverted to soil erosion and sediment control facilities.
12. All storm drainage outlets shall be stabilized, as required, before the discharge points become operational.
13. Stormwater from disturbed areas must be passed through erosion control barriers before discharge beyond disturbed areas or discharged into other drainage systems.
14. Erosion and sediment control measures shall be inspected and maintained on a daily basis by the O.F.R. to insure that channels, temporary and permanent ditches and pipes are clear of debris, that embankments and berms have not been breached and that all straw bales and silt fences are intact. Any failure of erosion and sediment control measures shall be immediately repaired by the contractor and inspected for approval by the O.F.R. and/or site engineer.
15. Dust shall be controlled by sprinkling or other approved methods as necessary, or as directed by the O.F.R.
16. Cut and fills shall not endanger adjoining property, nor divert water onto the property of others.
17. All fills shall be placed and compacted in 6" lifts to provide stability of material and to prevent settlement.
18. The O.F.R. shall inspect downstream conditions for evidence of sedimentation on a weekly basis and after rainstorms.
19. As warranted by field conditions, special additional erosion and sediment control measures, as specified by the site engineer and/or the Town Engineer shall be installed by the contractor.
20. Erosion and sediment control measures shall remain in place until all disturbed areas are suitably stabilized.

CONSTRUCTION SEQUENCE:

1. Install silt fence in general locations indicated on the plan.
2. Begin clearing and grubbing operations associated with fill placement.
3. Begin fill placement.
4. Spread seed and mulch on exposed soil areas to stabilize.
5. Spread asphalt millings as finished storage area surface.
6. Topsoil, seed, and mulch all disturbed areas as soon as practical in accordance with the Erosion and Sediment Control Notes contained on this page.

REQUIRED EROSION CONTROL SWPPP CONTENTS:

Pursuant to the NYSDEC "SPDES General Permit for Stormwater Discharges from Construction Activity" (GP–0–15–002), all Stormwater Pollution Prevention Plan's (SWPPP) shall include erosion and sediment control practices designed in conformance with the most current version of the technical standard, "New York Standards and Specifications for Erosion and Sediment Control." Where erosion and sediment control practices are not designed in conformance with this technical standard, the owner or operator must demonstrate equivalence to the technical standard. The following list of required SWPPP components is provided in accordance with Part III.B.1a–l of General Permit GP–0–15–002:

a. Background Information: The subject project consists of amending the current site plan to include an electrical contractor as a tenant to the existing barn located on Durkin Water Co. property, and to expand the existing outdoor storage and parking area on the Drew Realty, LLC. property

b. Site map / construction drawing: These plans serve to satisfy this SWPPP requirement.

c. Description of the soils present at the site: Onsite soils consist mainly of Charlton Loam – ChC and Chatfield–Charlton – CsD with a very small portion of Charlton–Chatfield – CrC, as identified on the Soil Conservation Service Web Soil Survey. These soil types belong to the Hydrologic Soil Group "B."

d. Construction phasing plan / sequence of operations: The Construction Sequence and phasing found on these plans provide the required phasing. A Construction Sequence and Erosion and Sediment Control Maintenance Schedule has been provided. The Sedimentation and Erosion Control Notes contained hereon outline a general sequence of operations for the proposed project. In general all erosion and sediment control facilities shall be installed prior to commencement with land disturbing activities, and areas of disturbance shall be limited to the shortest period of time as practicable.

e. Description of erosion and sediment control practices: This plan, and details / notes shown hereon serve to satisfy this SWPPP requirement.

f. Temporary and permanent soil stabilization plan: The Sedimentation and Erosion Control Notes and Details provided heron identify temporary and permanent stabilization measures to be employed with respect to specific elements of the project, and at the various stages of development.

g. Site map / construction drawing: This plan serves to satisfy this SWPPP requirement.

h. The dimensions, material specifications, installation details, and operation and maintenance requirements for all erosion and sediment control practices: The details, Erosion and Sediment Control Notes, and Erosion and Sediment Control Maintenance Schedule serve to satisfy this SWPPP requirement.

i. An inspection schedule: Inspections are to be performed twice weekly and by a qualified professional as required by the General Permit GP–0–15–002. In addition the NYSDEC Trained Contractor shall perform additional inspections as cited in the Sedimentation and Erosion Control Notes.

j. A description of pollution prevention measures that will be used to control litter, construction chemicals and construction debris: In general, all construction litter / debris shall be collected and removed from the site. The general contractor shall supply either waste barrels or dumpster for proper waste disposal. Any construction chemicals utilized during construction shall either be removed from site daily by the contractor or stored in a structurally sound and weatherproof building. No hazardous waste shall be disposed of onsite, and shall ultimately be disposed of in accordance with all federal, state and local regulations. Material Safety Data Sheets (MSDS), material inventory, and emergency contact numbers shall be maintained by the general contractor for all construction chemicals utilized onsite. Finally, temporary sanitary facilities (portable toilets) shall be provided onsite during the entire length of construction, and inspected weekly for evidence of leaking holding tanks.

k. A description and location of any stormwater discharges associated with industrial activity other than construction at the site: There are no known industrial stormwater discharges present or proposed at the site.

l. Identification of any elements of the design that are not in conformance with the technical standard, "New York Standards and Specifications for Erosion and Sediment Control." All proposed elements of this SWPPP have been designed in accordance with the "New York Standards and Specifications for Erosion and Sediment Control."

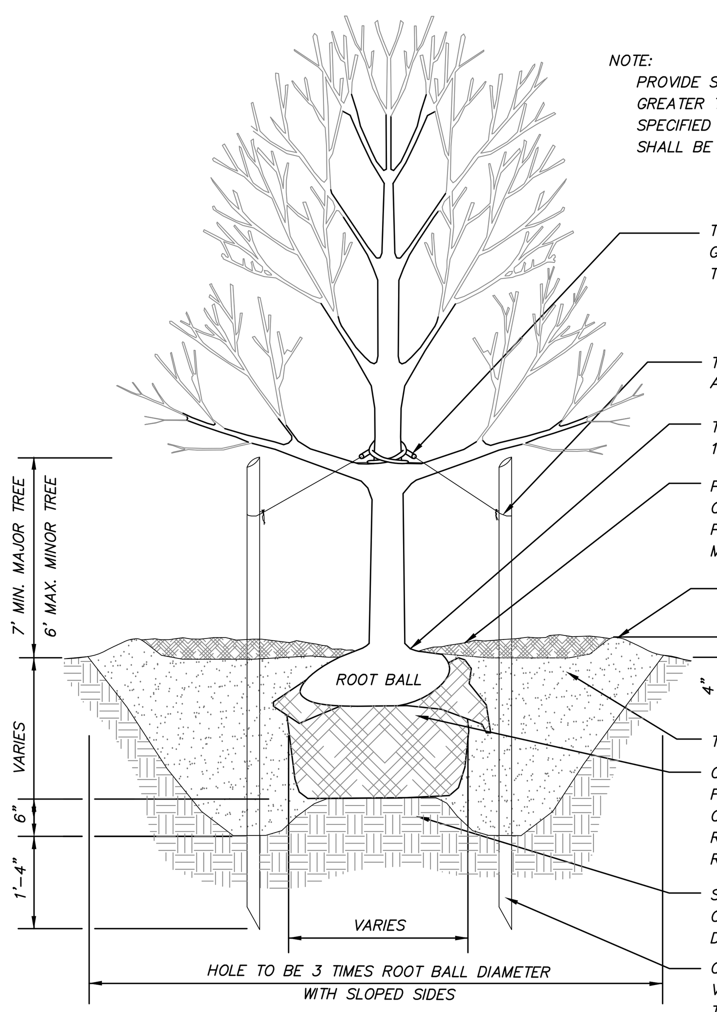

NOTE:
PROVIDE STAKING AND GUYING FOR TREES PLANTED ON SLOPES GREATER THAN 3H:1V, IN EXPOSED, WINDY AREAS AND AS SPECIFIED BY LANDSCAPE ARCHITECT. GUY WIRES AND STAKES SHALL BE REMOVED WITHIN TWELVE (12) MONTHS OF PLANTING.

- TWO (2) STRANDS NO. 12 GAUGE GALVANIZED ANNEALED STEEL WIRE TWISTED IN NEW RUBBER HOSE.
- TWO (2) STRANDS, DOUBLE WRAPPED AND TWISTED.
- TRUNK FLARE TO BE COMPLETELY EXPOSED. SET 1" TO 2" ABOVE ESTABLISHED FINISH GRADE.
- PROVIDE 3" LAYER OF MULCH AS SPECIFIED OVER ENTIRE WATERING SAUCER AT ALL TREE PITS OR OVER ENTIRE TREE BED. DO NOT PLACE MULCH WITHIN 3" OF TRUNK.
- FORM 4" HIGH TOPSOIL LIP AROUND EACH TREE PIT TO FORM WATERING SAUCER.
- TOPSOIL MIX BACKFILL.
- CUT AND REMOVE BINDING FROM TRUNK AND FROM AROUND AS MUCH OF BALL AS POSSIBLE. CUT AND REMOVE BURLAP AT UPPER 1/3 OF ROOT BALL. IF SYNTHETIC WRAP IS USED, REMOVE COMPLETELY.
- SIT ROOT BALL ON EXISTING UNDISTURBED SOIL OR ON COMPACTED SUBGRADE. DO NOT DIG DEEPER THAN THE DEPTH OF ROOT BALL.
- CEDAR STAKES, MIN. 3" DIA., LENGTH VARIES. 3 STAKES @ 120 DEG. PER MAJOR TREE. STAKES SHALL CLEAR ROOT BALL.

TREE PLANTING DETAIL
(N.T.S.)

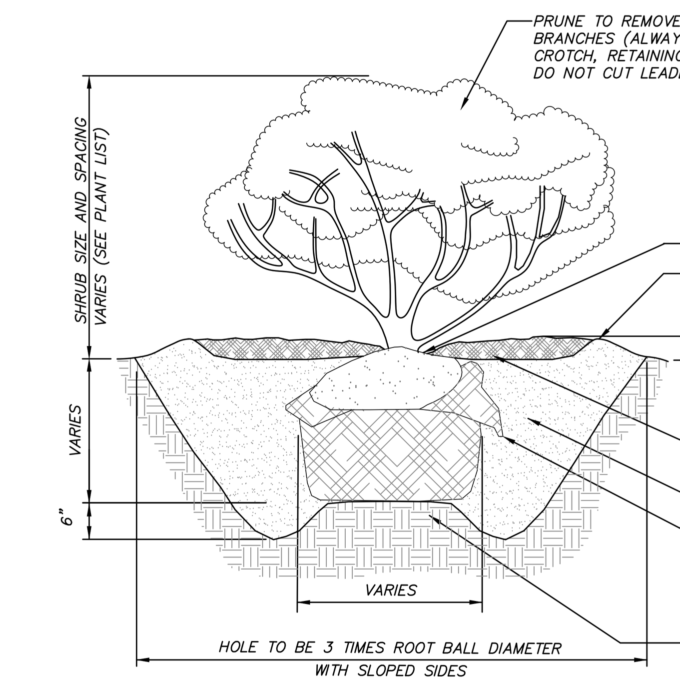

- PRUNE TO REMOVE DEAD OR DAMAGED BRANCHES (ALWAYS PRUNE TO NODE OR CROTCH, RETAINING NORMAL PLANT SHAPE. DO NOT CUT LEADER.)

NOTE:
CONTRACTOR SHALL HAVE OPTION OF PLANTING SHRUBS IN INDIVIDUAL PITS AS SHOWN OR IN UNINTERRUPTED EXCAVATION FOR ENTIRE BED. IN EITHER CASE BACKFILL WITH TOPSOIL MIX AS SPECIFIED.

- SET TOP OF ROOT BALL 1" ABOVE FINISH GRADE
- FORM 3" HIGH TOPSOIL LIP AROUND EACH SHRUB TO PROVIDE WATERING SAUCER.
- MULCH (3" LAYER) AS SPECIFIED OVER ENTIRE BED. DO NOT PLACE MULCH WITHIN 3" OF TRUNK.
- TOPSOIL MIX BACKFILL
- CUT AND REMOVE BINDING FROM TRUNKS AND AS MUCH OF BALL AS POSSIBLE. CUT AND REMOVE BURLAP AT UPPER 1/3 OF BALL. IF SYNTHETIC BURLAP IS USED, REMOVE COMPLETELY.
- SIT ROOT BALL ON EXISTING UNDISTURBED SOIL OR ON COMPACTED SUBGRADE. DO NOT DIG DEEPER THAN THE DEPTH OF THE ROOT BALL.

SHRUB PLANTING DETAIL
(N.T.S.)

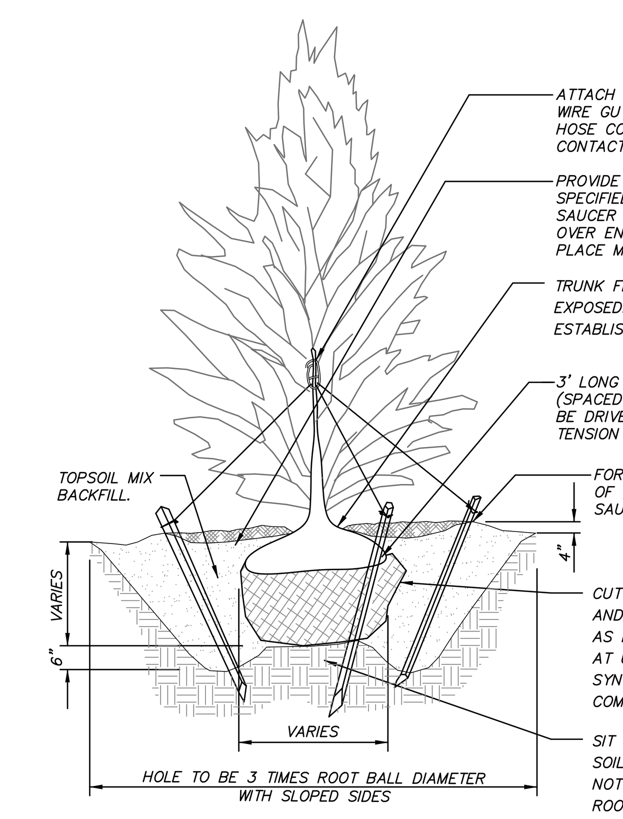

- ATTACH No. 10 GALV. ANNEALED WIRE GUYS TO TRUNK. USE RUBBER HOSE COVER WHERE WIRES ARE IN CONTACT WITH BRANCHES.
- PROVIDE 3" LAYER OF MULCH AS SPECIFIED OVER ENTIRE WATERING SAUCER AT ALL TREE PITS, OR OVER ENTIRE TREE BED. DO NOT PLACE MULCH WITHIN 3" OF TRUNK.
- TRUNK FLARE TO BE COMPLETELY EXPOSED. SET 1" TO 2" ABOVE ESTABLISHED FINISH GRADE.
- 3' LONG CEDAR STAKES, MIN. 3" DIA., (SPACED 120° IN PLAN). STAKES TO BE DRIVEN IN AFTER ATTACHING TO TENSION WIRE.
- FORM 4" HIGH TOPSOIL LIP AT EDGE OF TREE PIT TO FORM WATERING SAUCER
- CUT AND REMOVE BINDING FROM TRUNK AND FROM AROUND AS MUCH OF BALL AS POSSIBLE. CUT AND REMOVE BURLAP AT UPPER 1/3 OF ROOT BALL. IF SYNTHETIC WRAP IS USED, REMOVE COMPLETELY.
- SIT ROOT BALL ON EXISTING UNDISTURBED SOIL OR ON COMPACTED SUBGRADE. DO NOT DIG DEEPER THAN THE DEPTH OF ROOT BALL.

NOTE:
PROVIDE STAKING AND GUYING FOR TREES PLANTED ON SLOPES GREATER THAN 3H:1V, IN EXPOSED, WINDY AREAS AND AS SPECIFIED BY LANDSCAPE ARCHITECT. GUY WIRES AND STAKES SHALL BE REMOVED WITHIN TWELVE MONTHS OF PLANTING.

EVERGREEN TREE PLANTING DETAIL
(N.T.S.)

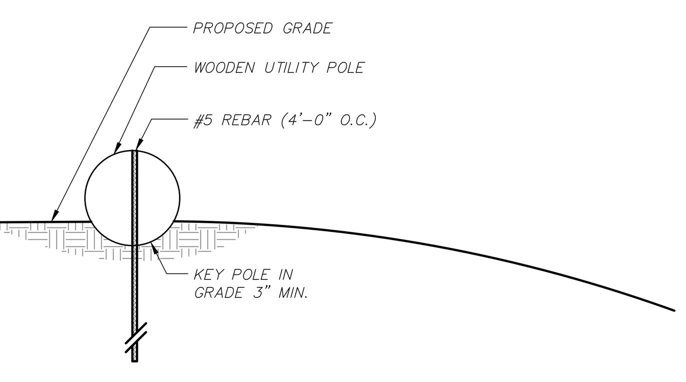

HORIZONTAL STAKED UTILITY POLE ON GRADE DETAIL
(N.T.S.)

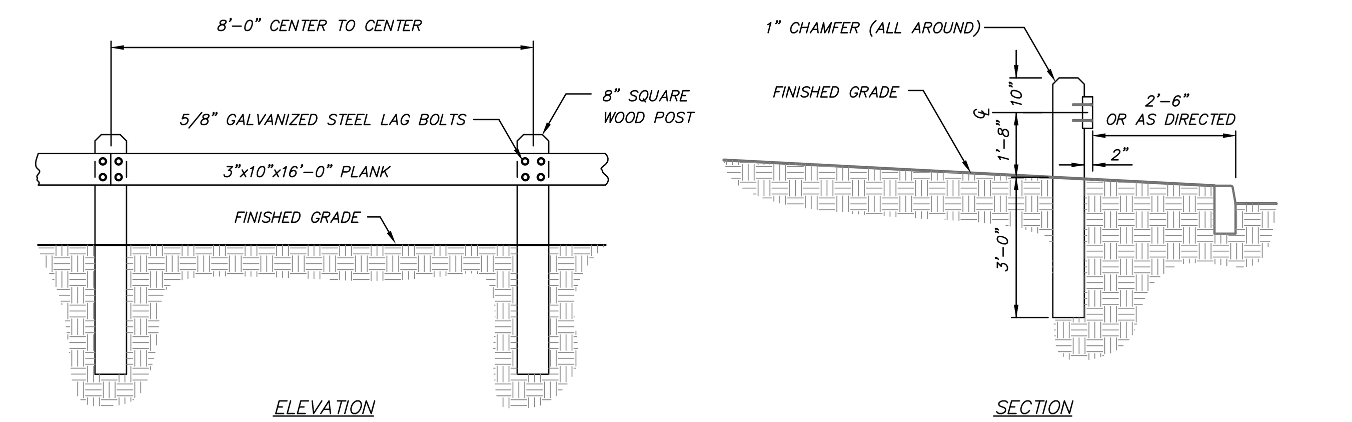

NOTES:
1. ALL WOOD TO BE SEASONED NO.1 DOUGLAS FIR, SOUTHERN PINE OR OTHER APPROVED STRUCTURAL LUMBER.
2. ALL WOOD TO BE TREATED WITH AN APPROVED WOOD PRESERVATIVE SUITABLE FOR INSTALLATION IN AND ADJACENT TO GROUND SURFACES.

WOOD GUIDE RAIL DETAIL
(N.T.S.)

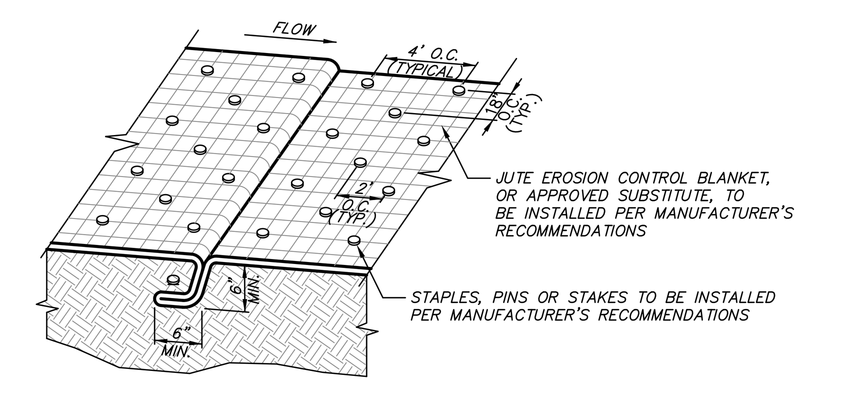

TYPICAL GEOTEXTILE ANCHORING DETAIL
(N.T.S)

EROSION AND SEDIMENT CONTROL MAINTENANCE SCHEDULE

MONITORING REQUIREMENTS				MAINTENANCE REQUIREMENTS	
PRACTICE	DAILY	WEEKLY	AFTER RAINFALL	DURING CONSTRUCTION	AFTER CONSTRUCTION
SILT FENCE BARRIER	–	Inspect	Inspect	Clean/Replace	Remove
DUST CONTROL	Inspect	–	Inspect	Mulching/ Spraying Water	N/A
*VEGETATIVE ESTABLISHMENT	–	Inspect	Inspect	Water/Reseed/ Remulch	Reseed to 80% Coverage
SOIL STOCKPILES	–	Inspect	Inspect	Mulching/ Silt Fence Repair	Remove
SWALES	–	Inspect	Inspect	Clean/Mulch/ Repair	Mow Permanent Grass/Replace/ Repair Rip Rap
ROAD & PAVEMENT	–	Inspect	Inspect	Clean	Clean

* Permanent vegetation is considered stabilized when 80% of the plant density is established. Erosion control measures shall remain in place until all disturbed areas area permanently stabilized.

Note: The party responsible for implementation of the maintenance schedule during and after construction is:

DREW REALTY, LLC
120 FIELDS LANE
BREWSTER, NY 10509

DURKIN WATER CO.
P.O. BOX 372
BREWSTER, NY 10509

and/or the current owner(s) of the subject property.

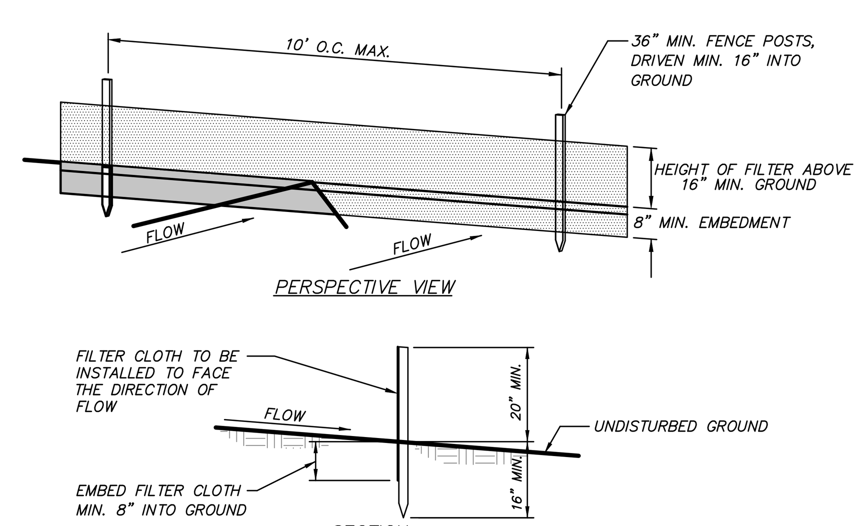

CONSTRUCTION NOTES FOR FABRICATED SILT FENCE

1. FILTER CLOTH TO BE FASTENED SECURELY TO POSTS AT TOP AND MID SECTION.
2. WHEN TWO SECTIONS OF FILTER CLOTH ADJOIN EACH OTHER THEY SHALL BE OVERLAPPED BY SIX INCHES AND FOLDED.
3. MAINTENANCE SHALL BE PERFORMED AS NEEDED AND MATERIAL REMOVED WHEN "BULGES" DEVELOP IN THE SILT FENCE.

POSTS: STEEL EITHER T OR U TYPE OR 2" HARDWOOD
FILTER CLOTH: FILTER X, MIRAFI 100X, STABILINKA T140N, OR APPROVED EQUAL
PREFABRICATED UNIT: GEOFAB, ENVIROFENCE, OR APPROVED EQUAL

SILT FENCE DETAIL
(N.T.S.)

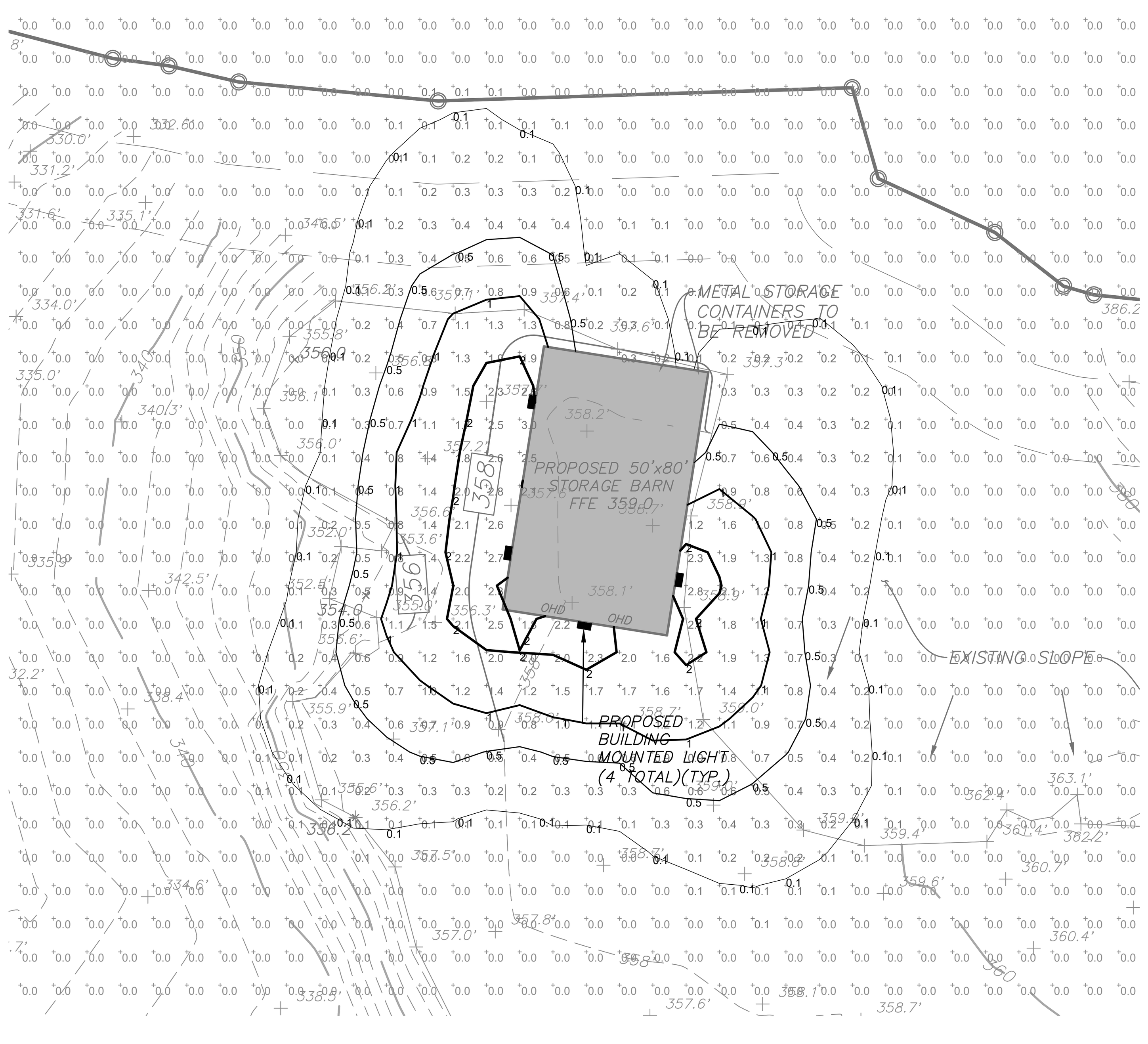

ENLARGED LIGHTING PLAN
SCALE: 1" = 30'

LUMINAIRE SCHEDULE

Symbol	Qty	Catalog Number	Description	Lamp	Mounting Height
▬	4	DSXW1 LED 20C 1000 30K T3M MVOLT	LITHONIA, DSXW1 LED WITH (2) 10 LED LIGHT ENGINES, TYPE T3M OPTIC, 3000K, @ 1000mA.	LED	18' – 0"

STATISTICS

DESCRIPTION	SYMBOL	AVG	MAX	MIN	AVG/MAX	AVG/MIN
Project Area	+	0.1 fc	3.4 fc	0.0 fc	N/A	N/A

LIGHT CONTOUR LEGEND

0.1	0.10 Foot Candles
0.5	0.50 Foot Candles
1	1.00 Foot Candles
2	2.00 Foot Candles

* Photometric calculations shown on plan are in foot candles.

D-Series Size 1
LED Wall Luminaire

d"series

Specifications
Luminaire
Width: 13-3/4" (34.9 cm) Weight: 12 lbs (5.4 kg)
Depth: 10" (25.4 cm)
Height: 6-3/8" (16.2 cm)

Back Box (BBW, ELCW)
Width: 13-3/4" (34.9 cm) BBW Weight: 5 lbs (2.3 kg)
Depth: 4" (10.2 cm) ELCW Weight: 10 lbs (4.5 kg)
Height: 6-3/8" (16.2 cm)

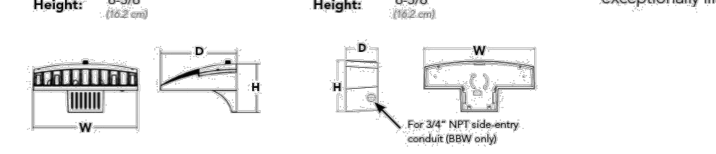

Introduction
The D-Series Wall luminaire is a stylish, fully integrated LED solution for building-mount applications. It features a sleek, modern design and is carefully engineered to provide long-lasting, energy-efficient lighting with a variety of optical and control options for customized performance.

With an expected service life of over 20 years of nighttime use and up to 74% in energy savings over comparable 250W metal halide luminaires, the D-Series Wall is a reliable, low-maintenance lighting solution that produces sites that are exceptionally illuminated.

LITHONIA LIGHTING
One Lithonia Way • Conyers, Georgia 30012 • Phone: 800.279.8041 • www.lithonia.com
© 2013-2019 Acuity Brands Lighting, Inc. All rights reserved.
DSXW1-LED
Rev. 3/06/19

LIGHTING NOTES:

1. All lighting shall be as noted on the plan or approved equal.
2. Style and finish of all luminaires to be selected by owner.
3. Calculation values shown in this plan are taken on a horizontal plane at ground level using a 0.90 light loss factor for LEDs. Topographical information and landscaping have not been accounted for in these calculations.
4. All lighting on this plan shall be directed and/or shielded so as to preclude objectionable glare from being observable from adjoining streets and properties.
5. Photometric modeling based on similar or specified fixtures.

NO.	DATE	REVISION	BY
3	5–20–19	REVISED FOR PLANNING BOARD SUBMISSION	JFR
2	5–6–19	REVISED PER TOWN CONSULTANT COMMENTS	JFR
1	4–1–19	REVISED PER TOWN CONSULTANT COMMENTS	JFR

INSITE
ENGINEERING, SURVEYING & LANDSCAPE ARCHITECTURE, P.C.
3 Garrett Place
Carmel, NY 10512
(845) 225–9690
(845) 225–9717 fax
www.insite–eng.com

PROJECT:
DURKIN WATER CO. AND DREW REALTY, LLC
120 & 160 FIELDS LANE, TOWN OF SOUTHEAST, PUTNAM CO., NEW YORK

DRAWING:
DETAILS

PROJECT NUMBER	99169.100	PROJECT MANAGER	J.J.C.
DATE	3–4–19	DRAWN BY	J.F.R.
SCALE	AS NOTED	CHECKED BY	J.L.L.

DRAWING NO. D–1
SHEET 3/3

ALTERATION OF THIS DOCUMENT, UNLESS UNDER THE DIRECTION OF A LICENSED PROFESSIONAL ENGINEER, IS A VIOLATION OF SECTION 7209 OF ARTICLE 145 OF THE EDUCATION LAW.

Z:\E\99169100\03 D-1.dwg, 5/20/2019 2:22:08 PM, jrusso, 1:1